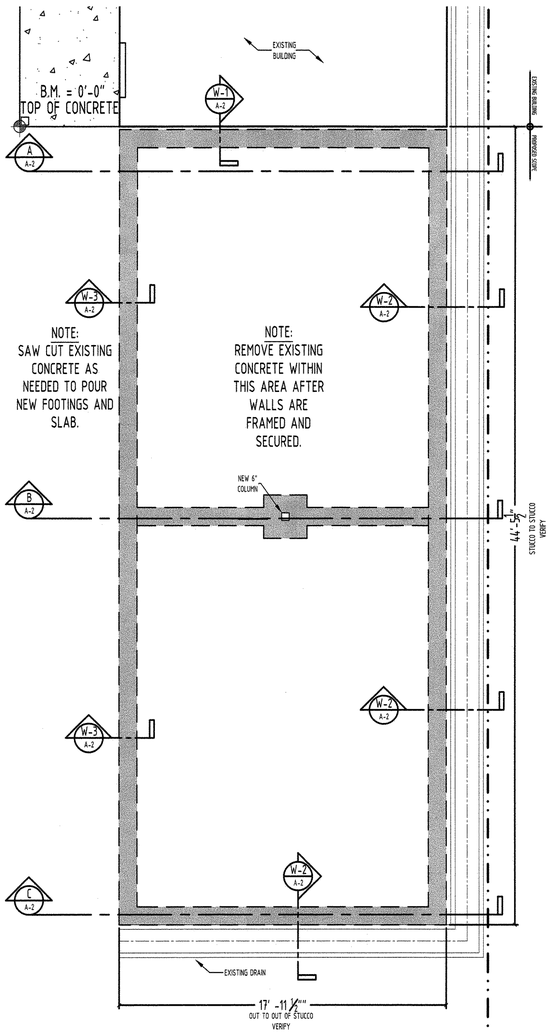

1 PROPOSED FOUNDATION PLAN
A-2 SCALE: 1/4" = 1'-0"

NOTE:

VERIFY ALL EXISTING CONDITIONS

REFER TO SA ENGINEERING CO. FOR FOUNDATION, STEEL & SLAB SPECIFIC DETAILS & DIMENSIONS. SHEET S-1

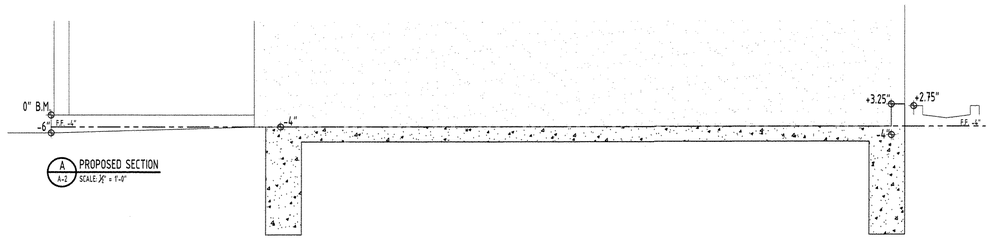

A PROPOSED SECTION
A-2 SCALE: 1/2" = 1'-0"

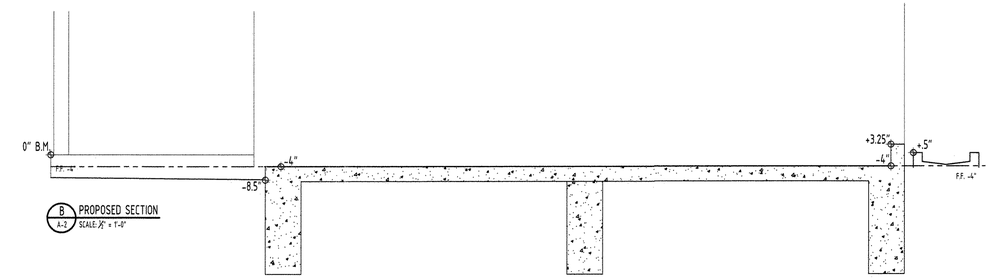

B PROPOSED SECTION
A-2 SCALE: 1/2" = 1'-0"

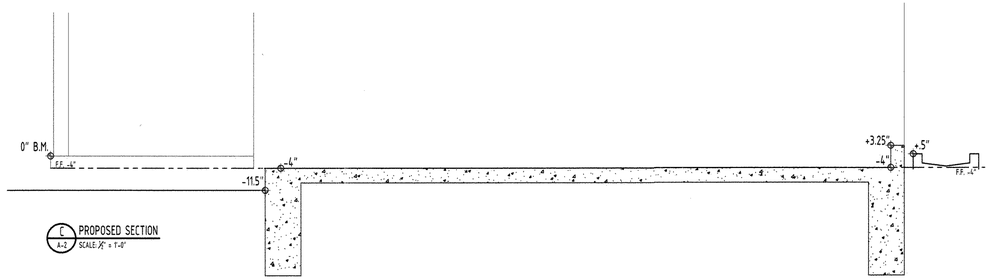

C PROPOSED SECTION
A-2 SCALE: 1/2" = 1'-0"

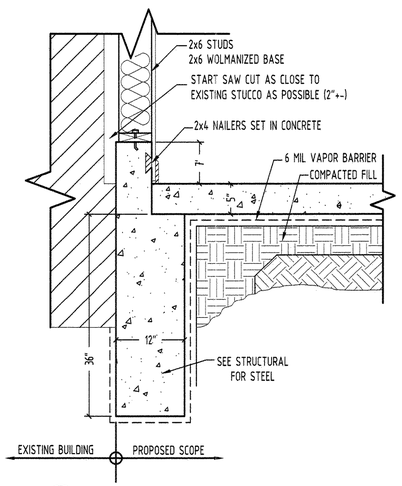

W-1 DETAIL
A-2 SCALE: 1" = 1'-0"

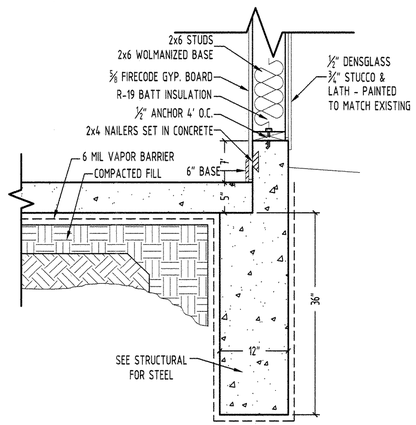

W-2 DETAIL
A-2 SCALE: 1" = 1'-0"

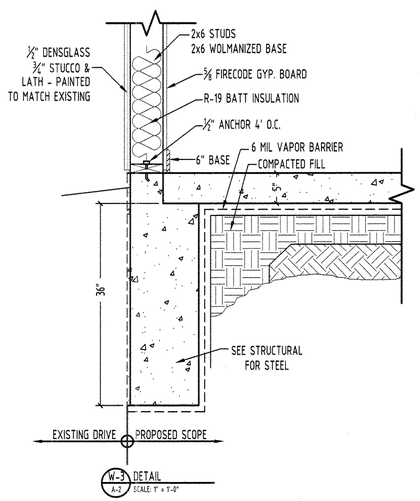

W-3 DETAIL
A-2 SCALE: 1" = 1'-0"

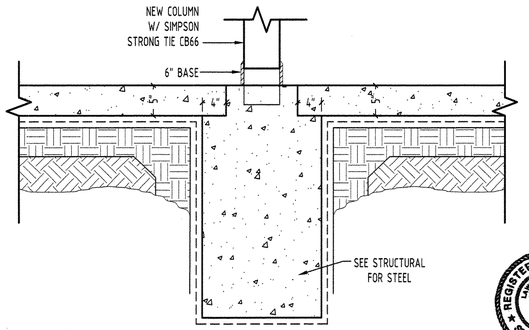

W-4 DETAIL
A-2 SCALE: 1" = 1'-0"

REGISTERED ARCHITECT
LAWRENCE A. CELL
4938
STATE OF TEXAS
4/10/19

Revisions:

BEXAR

SAN ANTONIO ART LEAGUE

CARPORT ENCLOSURE
130 KING WILLIAM ST.
SAN ANTONIO TEXAS

© HARRY JEWETT ASSOCIATES 2015

HARRY JEWETT ASSOCIATES
Engineers • Architects • Planners

307 West Rhapsody Drive
San Antonio, Texas 78216
(210) 737-3417
(866) 737-3417

TEXAS REGISTERED ENGINEERING FIRM: F-1225

TEXAS LICENSED SURVEYING FIRM: 100010-00

Job No.: 19003

Date: 3/19/2019

Drawn by: LAG/CNL

Sheet: A-2

Of 3